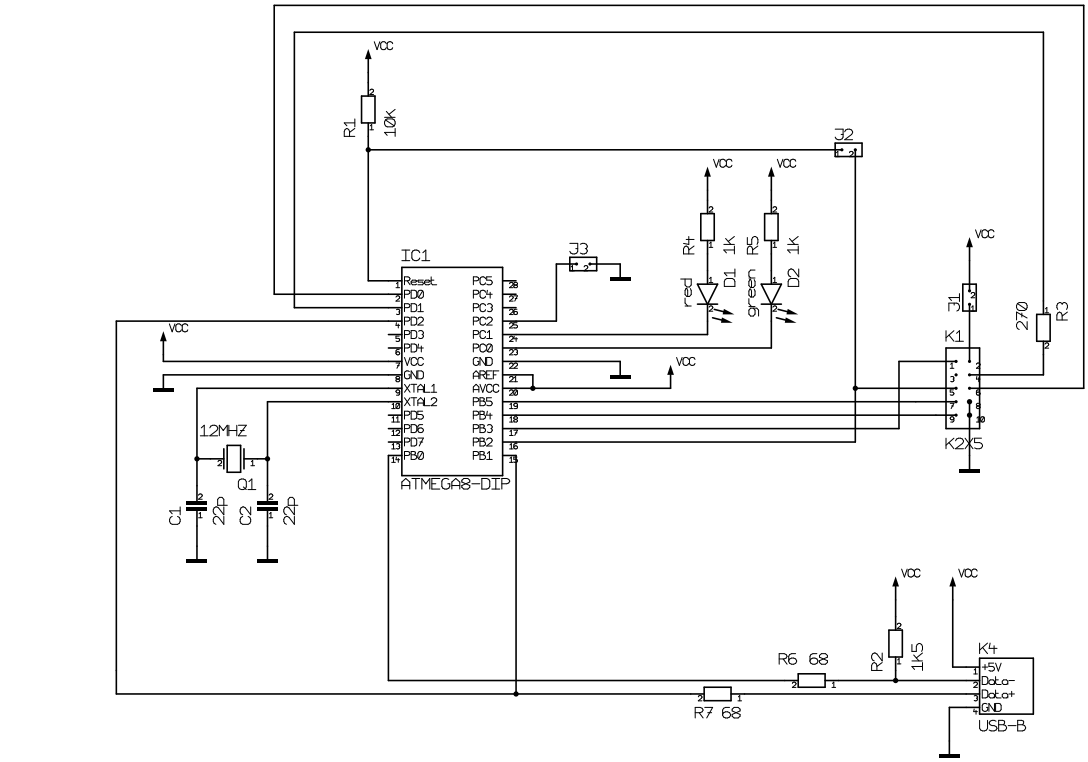

This is a simple 5V version WITHOUT level converters!

Date 21.04.05	Rev 1.0
Title USBasp	
tfischl@gmx.de	